RADICAL GEARBOX MK III
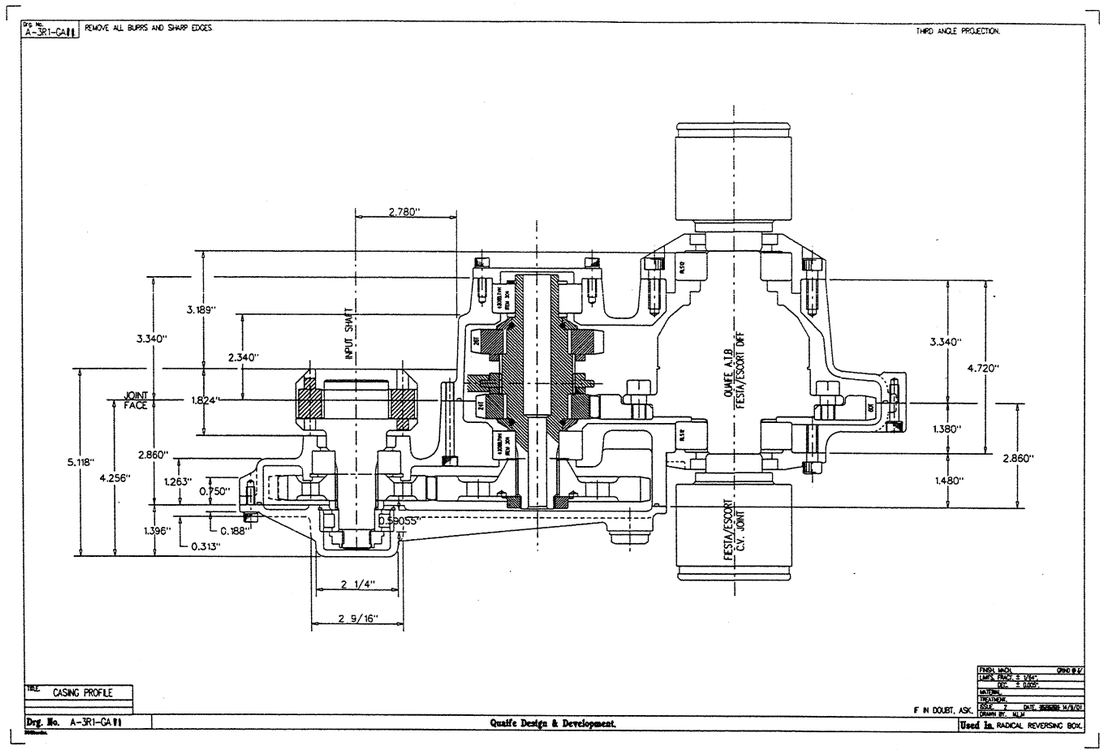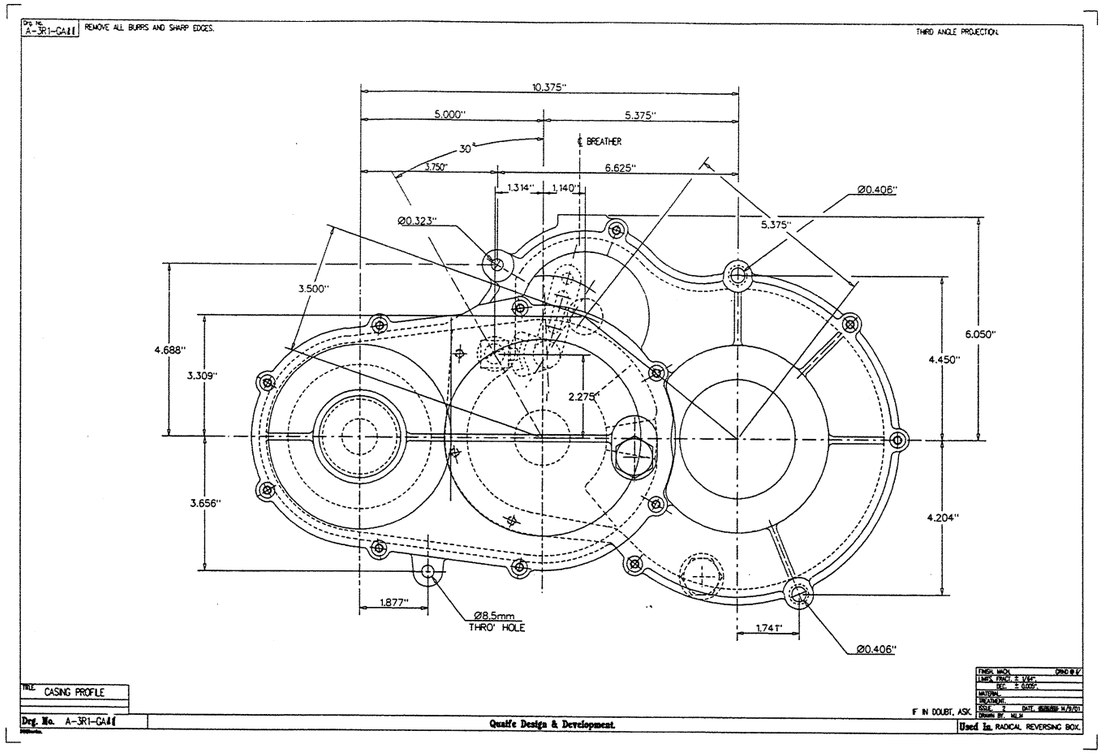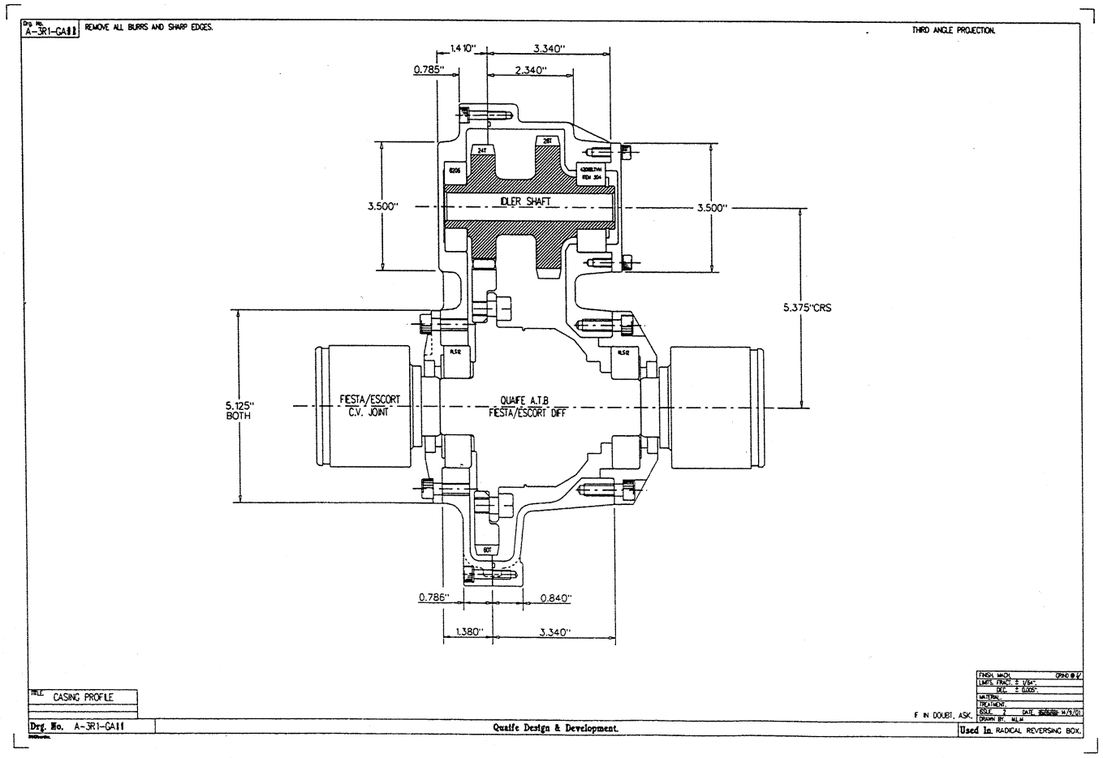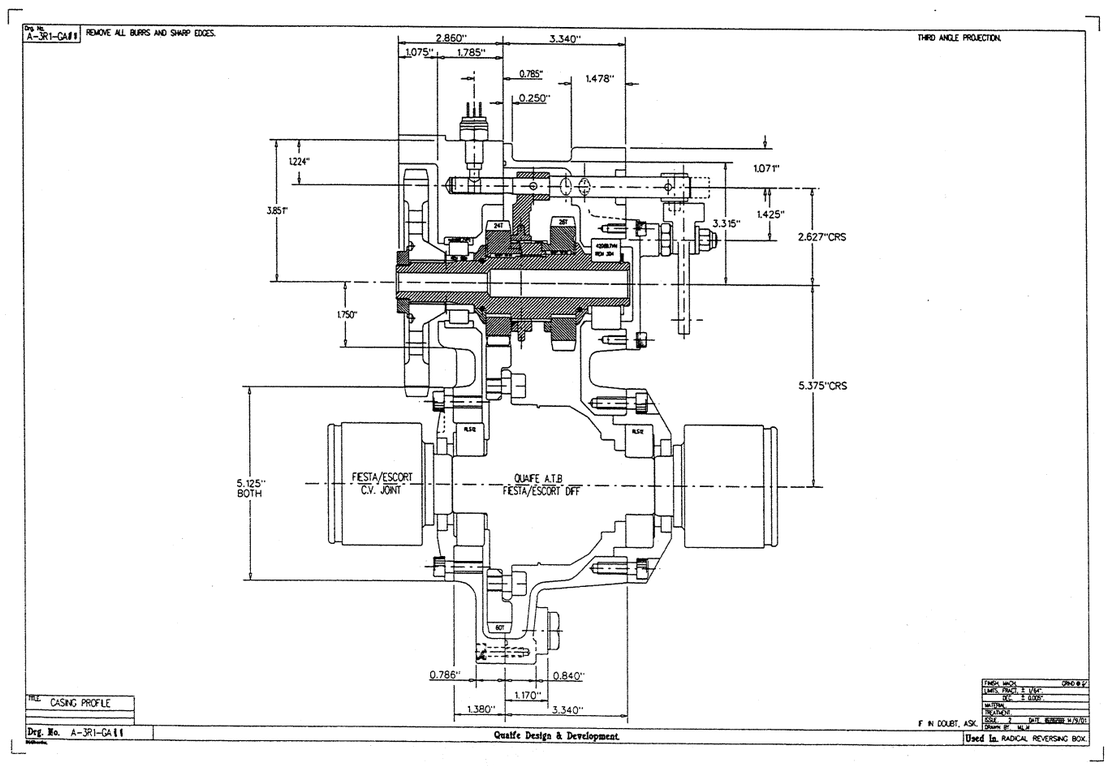
M.L.M. 29/11/00